BC Youth STEAM 2022 Contest

1 Math: PEMDAS – 1 ticket

Compute the following expression:

$$9 \times 3 \times 2 + (32/2) + 1952$$

By the use of basic algebra techniques, the answer is **2022**.

2 Biology: What are we? – 5 tickets

Because you are likely a human taking this contest, what is the taxonomic classification of the family that humans belong to?

A simple Google search will reveal that the taxonomic family humans belong to is **Great apes** or **Hominidae**.

3 Statistics: Don't Be Fooled – 10 tickets

The following table compares the hand dominance of 100 Canadian high-school students and what type of art form they enjoy more. Suppose one student is chosen randomly from this group of 100.

	Visual Arts	Literary Arts	**Total**
Left-handed	22	22	**44**
Right-handed	23	33	**56**
Total	**45**	**55**	**100**

What is the probability that the student chosen enjoys the visual arts more as a form of entertainment?

The students are chosen from a sample size of 100, as given in the question. It is looking for the total of the number of students in the visual arts column in the table. The probability is thus given by $\frac{45}{100}$ or $\frac{9}{20}$.

4 English Literature: A Bit of Poetry – 20 tickets

Read the following poem.

> I hoped to never find the day where you spoke so easily,
> the words i never wanted to hear;

but they are here, is sticking with me—
and will do so for the next four months.
The day is almost over, the night falling into place,
a bloodbath of sorrowful thoughts besieging my mansion,
to call it his own; he who is an artist, perhaps,
encapsulating every corner with a form
of darkness and ripping the eyes of a cat out
who calls me his and i to him. Let us cry by him! Listen
to the withdrawing purrs and sudden sadness
for finding a friend so lost—
though he is familiar with this feeling.
Let me thus cry alone, enclose my wailing thoughts
and sit by the sleeping angel's side for a turnover
of darkness. The morning comes, sable lightning
recedes from every corner of my being, my cat's eyes
drawn back into him, the mansion lightened once again.
But my eyes are weakened—body frail—unable to see through the lights
that embroiders my every being. ah, so it happened to be:
I have once again dreamed of her.

(2022)

There are many types of forms of poetry out there, including short and long poetic forms. What form is this poem primarily associated with?

For this poem, there isn't a clear rhyme scheme or structure of the poem apparent. Thus, this poem can be viewed as a **free verse** poem like most modern-day poetry.

5 Astronomy: Unknown Messier Object – 30 tickets

Below is an image of an open cluster. Give the Messier number of the astronomical object shown (e.g. M67).

As any research techniques are allowed in the contest, a Google Reverse Image Search will show that the Messier number of the astronomical object in the image is **34**.

6 Chemistry: Balance! – 40 tickets

When you balance the equation below, what is the sum of the coefficients a, b, c, and d?

$$a\mathrm{C_4H_6} + b\mathrm{O_2} \rightarrow c\mathrm{CO_2} + d\mathrm{H_2O}$$

To balance the equation, both sides must have equal numbers of each element. With some logical steps, one will find that the balanced equation here is: $2\,\mathrm{C_4H_6} + 11\,\mathrm{O_2} \longrightarrow 8\,\mathrm{CO_2} + 6\,\mathrm{H_2O}$. Adding all the coefficients results in the answer of **27**.

7 Finance: Dabydoo's Company – 50 tickets

Dabydoo's Company has eight account titles with balances listed below.

(1) Accounts Receivable - 2000
(2) Accounts Payable - 2000
(3) Cash - 30000
(4) Wages Expense - 2000
(5) Depreciation Expense - 1500
(6) Sales Revenue - 1900
(7) Accumulated Depreciation - 1900
(8) Direct Material Inventory - 590

(9) Miscellaneous Expense - 100

What is the total equity?

Equity = Assets - Liabilities. Here, it is important to decipher which elements are assets/liabilities and which are not. (1), (3), and (8) are considered assets and only (2) is considered a liability. While the marking on this question was more lenient considering its placement, the correct answer $2000 + 30000 - 2000 + 590$ which is **30590**.

8 Visual Art: Colours – 75 tickets

What is the movement associated with this painting and who were the three forefront people associated with this style of painting?

While it may not be immediately obvious, some research into art history would show that this painting is featured in the **Impressionism** movement in art. **Claude Monet, Pierre-Auguste Renoir, Alfred Sisley, Edgar Degas, and Berthe Morisot** were the primary forefront individuals of this movement.

9 Math: Expensive Hiking Trip – 100 tickets

Travelling to a remote hiking location, a group of teenagers decide to split the $5100 cost needed to get there. When two of the friends decided not to go on the trip, those remaining

divided the \$5100 cost equally, and each friend's share of the cost increased by \$40. How big was this original group?

If we let x be the number of people on the trip initially, then we can write:

$$\frac{5100}{x} = \frac{5100}{x-2} - 40$$

as the cost is increased per person by \$40 when 2 people don't go on the trip. Solving for x would give that the original group had **17 people**.

10 Chemistry: Weird Hydrogen Bonding – 150 tickets

H^- are anions found in metal hydrides such as NaH or MgH_2. Interestingly, however, BeH_2 does not form an ionic, lattice structure, and instead follows a unique covalent, polymer-like structure as shown below:

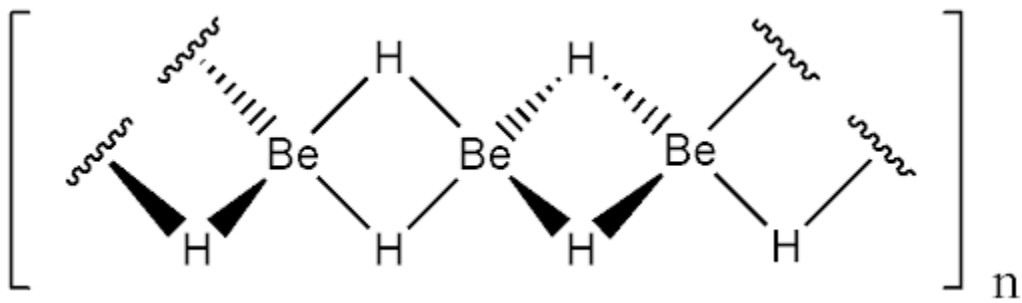

Here, the hydrogens seem to form two single bonds! However, this is actually representative of a more general type of bonding that is present in most notably boron hydride structures. What is the general name of the Be–H–Be bond present here?

This is a special type of bond that involves overlap of orbitals of three atoms sharing 2 electrons, which makes it an electron-deficient bond. This is better known as a **3-center-2-electron bond** or **bridge bond**.

11 Physics: Equivalent Resistance – 200 tickets

If all the resistors in the diagram below have equal resistance $R = 50\,\Omega$, what is the equivalent resistance from point A to B?

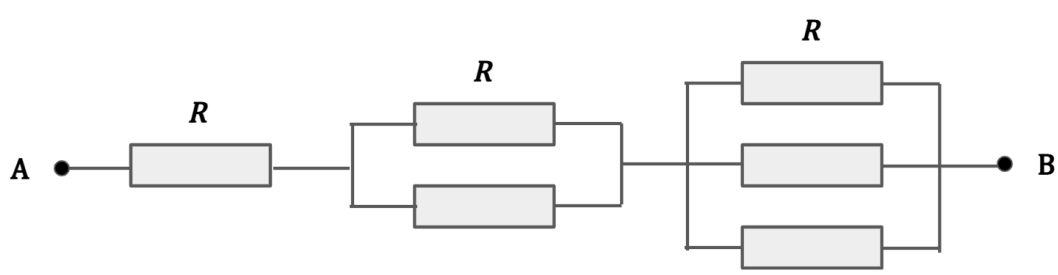

The middle two resistors are equivalent to a single resistor of resistance

$$\frac{1}{\frac{1}{R}+\frac{1}{R}} = \frac{R}{2},$$

since they are in parallel, and, similarly, the three resistors on the right are equivalent to a single resistor of resistance

$$\frac{1}{\frac{1}{R}+\frac{1}{R}+\frac{1}{R}} = \frac{R}{3}.$$

Now we effectively have three resistors in series. Thus, the equivalent resistance from point A to B is

$$R_{\text{eqq}} = R + \frac{R}{2} + \frac{R}{3} = \frac{11R}{6} \approx 91.7\,\Omega.$$

12 Biology: Past Generations – 300 tickets

Below is a pedigree tree for a certain disease:

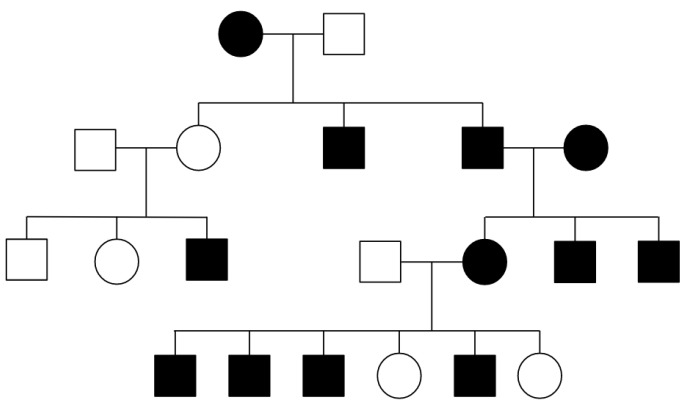

From this information, what is the most likely inheritance pattern for the disease?

Immediately, this disease cannot be Y-linked as some females, with XX chromosomes, were affected by the disease. It also cannot be a dominant trait because otherwise, on the left branch, two unaffected parents cannot have an affected offspring. This leaves autosomal recessive or X-linked recessive. When observing the pedigree tree, for the offspring between a healthy male and an affected or carrier female, the male individuals in the offspring have the disease while the females in the next generation do not. This would suggest **X-linked Recessive**.

13 Chemistry: Nile Red – 400 tickets

Nile Red is known for his amazing experiments. For example, in one episode, he transformed plastic gloves into grape soda. At the 12:22 minute mark, he introduced step 3 of that process which involves phthalic anhydride. An anhydride is a group that contains two acyl (or carbonyl) groups bonded to the same oxygen atom. The product of the reaction essentially swaps that oxygen atom with a nitrogen atom, creating a new organic group. What is the general name of that functional group?

While it may be difficult to pinpoint the specific name for a specific group like this, some researching and investigation would lead to the answer of **imide**. Further, the phrase 'imide' is part of the name of the organic chemical containing the group in question.

14 Psychology: Social Psychology – 500 tickets

A group discusses a sensitive topic and the end result is that the group makes a decision that is more extreme than the average position of all the group members prior to the discussion. What is this an example of?

While it may be difficult to find the correct terminology for this question, the answer is **group polarization**. This is where groups take a more extreme position on a topic as compared to the members' prior perspectives. This is studied in social psychology and can be observed in many occasions, including in court or in politics.

15 Statistics: The Importance of Mental Health – 650 tickets

Mental health treatment during the COVID-19 pandemic is emphasized more than ever, especially for those who are still in their teenage years. In a survey conducted by a regional research center that asked a random sample of 820 teenagers in Canada if they have gone through some form of mental health treatment, 52% answered yes. Jason constructs a one sample z proportion test at the 95% confidence level for the proportion of all teenagers in Canada who would respond that they have gone through some form of mental treatment, checks the conditions, calculates the confidence interval, and gives a proper conclusion based on the confidence interval. What is the margin of error in this case?

We are only asked to find the margin of error for this scenario. This can be calculated using:

$$MOE = z\frac{\sigma}{\sqrt{n}} \cdot \sqrt{\frac{N-n}{N-1}}$$

Where z is the z-score for the confidence interval (which is in this case 1.96 given the 95% confidence interval), σ is the standard deviation, and n is the sample size, and N is the population size, since we are given a finite population size.

$\sigma = \sqrt{\hat{p} \cdot (1 - \hat{p})}$ where $\hat{p}$ is the sample proportion or the proportion of the same that is of interest in this question. Considering $\sqrt{\frac{N-n}{N-1}}$ is approximately 1 as N is large, we can say basically that margin of error is approximately $z\frac{\sigma}{\sqrt{n}}$. Then, we have that:

$$MOE \approx (1.96) \cdot \frac{\sqrt{(0.52)(1 - 0.52)}}{\sqrt{820}}$$

This gives the value of **3.42%**.

16 Chemistry: Tricky Electrochemistry – 800 tickets

A metal X goes by the following series of reduction potentials:

$$\begin{aligned} X^{3+} + e^- &\rightarrow X^{2+} \qquad E^\circ = -0.55\,V \\ X^{2+} + 2e^- &\rightarrow X \qquad E^\circ = -1.15\,V \end{aligned}$$

What would be the reduction potential of $X^{3+} + 3e^- \rightarrow X$?

In general, we can't actually add reduction potentials to arrive at our final equation, unlike Hess's Law. For this question, we have to use

$$\Delta G^\circ = -nFE^\circ$$

The n, which is the electrons transferred in the reaction, plays an important role in cases where the reduction potentials involve a different amount of electrons

In this case, we must combine the ΔG values for both and use that to find the E° for the desired reaction of $X^{3+} + 3\,e^- \longrightarrow X$. In other words, $-(1)FE_1^\circ - (2)FE_2^\circ = -(3)FE_T^\circ$. Solving gives the answer of **-0.95 V**

17 Physics: Golden Cannonball – 1000 tickets

Jeff the pirate is trying to sink an enemy ship in the Mediterranean Sea with a cannonball made of an alloy of iron and gold. However, when he fires his cannon, he misses terribly!

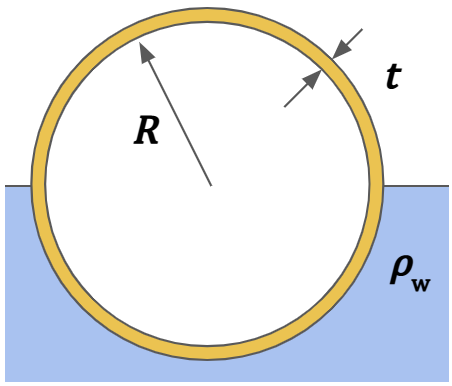

Jeff later catches sight of the cannonball floating in still water. If exactly half of the cannonball is submerged in the water, what is the density of the alloy used to make the cannonball? Assume that the nearly hollow cannonball has an inner radius of $R = 12.0\,\text{cm}$ and a thickness of $t = 0.150\,\text{cm}$ (so that $t \ll R$) and that seawater has a density of $\rho_\text{w} = 1030\,\text{kg/m}^3$.

The gravitational force F_g on the ball is equal to the buoyant force F_B. Let us first find F_B. By Archimedes's Principle,

$$F_B = \rho_\text{w} g \left(\frac{2}{3}\pi R^3\right).$$

Since $t \ll R$, we can approximate the gravitational force as

$$F_g = \rho(4\pi R^2)tg,$$

where ρ is the density of the alloy. Thus,

$$\rho(4\pi R^2)tg = \rho_\text{w} g \left(\frac{2}{3}\pi R^3\right),$$

so we can compute ρ as

$$\rho = \frac{\rho_w R}{6t} = 13700\,\text{kg/m}^3$$

18 Music: Guess the Score – 1250 tickets

Below is an image of a section of the score of a certain musical composition. What year was this piece composed?

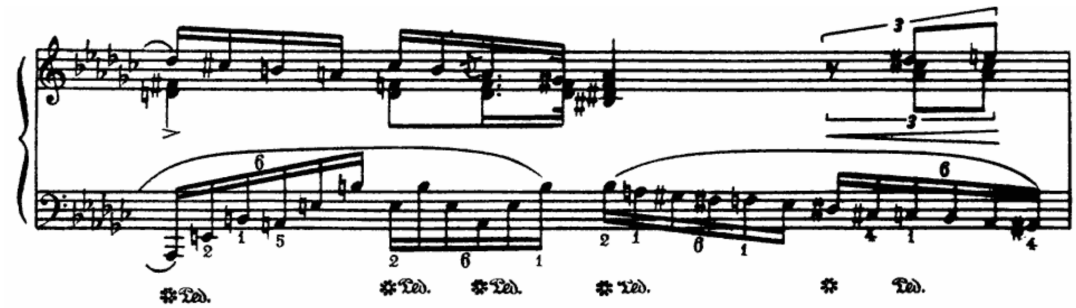

As any research techniques are allowed in the contest. This piece is the Toccata in E-flat minor by Aram Kachaturian, composed in 1932.

19 Physics: Michael's Bouncy Ball – 1500 tickets

Michael is at the Grand Canyon and is standing next to a 50 m tall cliff. He throws a bouncy ball off the cliff with speed 10 m/s at an angle of 60° with respect to the horizontal, as shown in the diagram below.

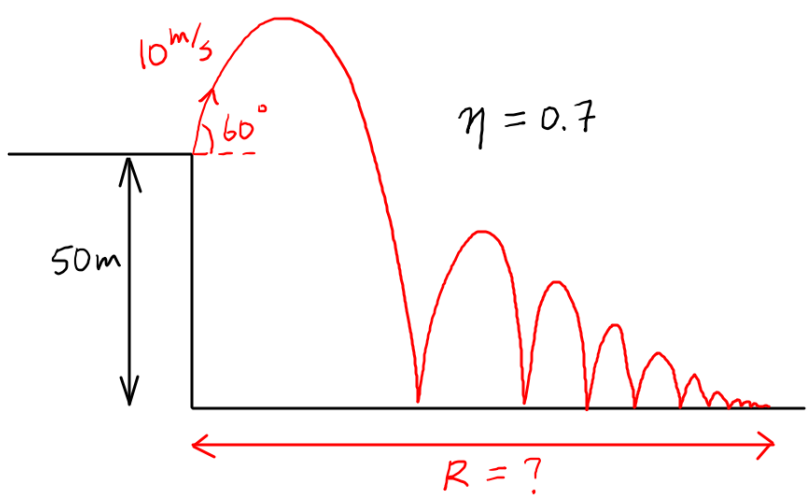

If the bouncy ball has a coefficient of restitution $\eta = 0.7$ with the ground (i.e. after each bounce, the bouncy ball's speed is η times of what it was before), what will be the total horizontal distance that the bouncy ball travels away from Michael? Give your answer to three significant figures.

Let us first find the horizontal distance d_1 the ball travels before its first bounce. If t_1 is the time elapsed from its launch before its first bounce,

$$(10 \sin 60°)t)1 - \frac{1}{2}(9.81)t_1^2 = -50,$$

which yields $t_1 = 4.20\,\text{s}$. Thus,

$$d_1 = (10\cos 60^\circ)(4.20\,\mathrm{s}) = 21.0\,\mathrm{m}.$$

Right after the first bounce, the angle θ (magnitude) that the ball's velocity makes with the vertical will be unchanged. Since

$$\tan\theta = \frac{|10\sin 60^\circ - (9.81)(4.20)|}{10\cos 60^\circ},$$

we get $\theta = 81.3^\circ$. Since the ball's speed is multiplied by a factor of η after the first bounce, we can use the range formula to find the horizontal distance that the ball travels between its first and second bounces:

$$d_2 = \frac{\eta^2 v^2 \sin 2\theta}{g},$$

where v is the speed of the ball right before its first bounce. By energy conservation,

$$\frac{1}{2}v_0^2 = \frac{1}{2}v^2 + (9.81)(50),$$

which yields $v = 32.9\,\mathrm{m/s}$. The horizontal distance that the ball travels between subsequent bounces is multiplied by a factor of η^2 for each bounce, so the total horizontal distance D that the ball travels is

$$D = d_1 + \frac{\eta^2 v^2 \sin 2\theta}{g}(1 + \eta^2 + \eta^4 + \dots).$$

Plugging the numbers in, we get that $D = 52.8\,\mathrm{m}$.

20 Computer Science: Big Numbers – 1750 tickets

If b is the inverse modulo of $a \bmod c$, $ab \equiv 1 \pmod c$.

(a) Find the modulo inverse of $21^{10^{18}} \bmod 10^9 + 7$.
(b) Find the modulo inverse of $21^{10^{18}} \bmod 10^9 + 3$.

The following steps are taken to solve the two problems.

a) Use Fermat's Little Theorem. Basically raise $21^{10^{18}}$ to the power of $10^9 + 5 \bmod 10^9 + 7$

b) Use Extended Euclidean Algorithm. https://usaco.guide/adv/extend-euclid?lang=cpp

The answer are: a) 753568836 b) 140526838

21 Math: Trees Are Great – 2000 tickets

Trees in Computer Science and Math are very prevalent. For example: binary trees or the infamous TREE(3) number. This may be useful in the following problem.

There is a list of 2048 distinct numbers. Every time, you can pick two numbers that you choose and compare them. You are given the task of finding the minimum number of comparisons it takes to find the maximum of the 2048 numbers. It is easy, of course: just pick the first and second numbers, record the maximum of them, and compare that maximum with the third number. Repeat the process on and on until you reach the 2048th number. This would require a total of $n - 1$ comparisons. Now you are given the more difficult task of getting the maximum as well as the second maximum in a different set of 2048 distinct numbers. Please determine the bare minimum number of comparisons required.

Let's compare first number with second number, third number with fourth number and so on. Next, let's compare the maximum of the first and second numbers with the maximum of the third and fourth number. We will keep doing this until we have 1 number left. It can be shown that the maximum this way is found in 2047 moves. We can discover that this way of comparing numbers form a binary tree. Since we have 2048 numbers, we will have a depth of $\log_2(2048) + 1 = 12$. We realize that only numbers lost to the maximum can be second maximum. There are 11 numbers that lost to the maximum. Getting the maximum out of the 11 numbers uses 10 comparisons. The answer is $2047 + 10 = 2057$ moves.

22 Physics: Pencil on the Moon – 2500 tickets

An astronaut is on a spaceship that is on the surface of the Moon. She attaches a pencil to a pivot on the wall of the spaceship so that the pencil can only rotate up and down. If she holds the pencil at 30° to the vertical lets it fall down, how long does it take to rotate through 150° and hit the wall? You may find it helpful to solve this problem numerically, using Python or another coding language.

The pivot is frictionless and the acceleration due to gravity on the Moon is $1.6\,\mathrm{m/s^2}$ and the pencil is 20 cm long.

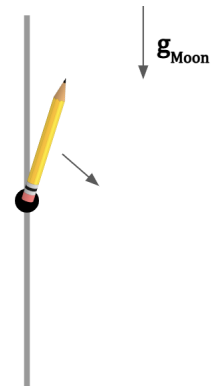

Let the mass of the pencil be m, its length be L, gravitational acceleration on the moon be g, and the angle that the pencil makes with the vertical be θ. Writing out Newton's Second Law for rotation, we get

$$\frac{1}{2}mgL\sin\theta = \frac{1}{3}mL^2\ddot{\theta},$$

which yields

$$\ddot{\theta} = \frac{3g}{2L}g\sin\theta.$$

It is very difficult to analytically obtain $\theta(t)$ from this differential equation, so we can solve it numerically. An example solution is shown below using Python:

```
import math

g = 1.6
L = 0.20

theta = math.pi / 6
dtheta = 0
ddtheta = 3 * g * math.sin(theta) / (2 * L)

t = 0
dt = 0.0001

while theta < math.pi:
    t += dt
    theta += dtheta * dt
    dtheta += ddtheta * dt
    ddtheta = 3 * g * math.sin(theta) / (2 * L)

print(t)
```

This code yields $t = 0.799\,\text{s}$.

23 Quantum Mechanics: The Quantum Realm is Bizarre – 3000 tickets

The s-orbital is often depicted as a sphere of electron density without any nodes. However, this is not always true. The radial wave function for an ns orbital, where $n = 1, 2, 3, \ldots$ for a hydrogen-like atom as a function of the radius is given by:

$$\psi(r) = c \cdot (720 - 1800\rho + 1200\rho^2 - 300\rho^3 + 30\rho^4 - \rho^5) \cdot Z^{3/2} \cdot e^{-\rho/2},$$

where c is a normalization constant, $\rho = Zr/a_0$, Z is a constant corresponding to the effective nuclear charge, and a_0 is the Bohr radius, which is also a constant. What is the value of n? Or, in other words, what s-orbital does this radial wave function correspond to? Note: you can essentially ignore the constant terms as they do not influence the result you should get.

For s-orbitals, there can be radial nodes. 1s orbitals don't, but as you goes to 2s or higher, there are radial nodes. The number is simply given by n-1.

For our case, we need to find how many radial nodes are given from the radial wavefunction of a supposed orbital of a hydrogen-like atom. A redial node is a spherical region where finding an electron there is essentially 0.

It is important here to note that, in simple terms, one postulate/axiom of quantum mechanics is that the probability of finding a system in a given state is proportional to the square of the wavefunction's amplitude for that state. In other words, for us to find the number of radial nodes from the radial wavefunction equation, we just need to get where $\psi(r)$ intersects the x-axis, as squaring an amplitude of 0 is 0.

The radial wavefunction dependent on the variable r, or the radial distance from the center. This is included inside the term ρ. Therefore, producing a graph of $(720 - 1800x + 1200x^2 - 300x^3 + 30x^4 - x^5$ on Desmos, for example, would show the number of x-intercepts of the function. Counting the number, we get the value of 5 (also since it is a quintic polynomial). Since the number of radial nodes is given by $n - 1$, we can simply set $n - 1 = 5$ to get **6** as our answer.

24 Armageddon: Physics – 4000 tickets

An asteroid in the solar system is moving closer to the Sun. When the asteroid reaches the Earth's orbit, its velocity vector $|\vec{v}| = 9.85\,\mathrm{km/s}$ makes an angle of $105°$ with its position vector from the Sun. State (a) what type of orbit the asteroid is in and determine (b) the following parameters of the asteroid:

- Semi-major axis
- Eccentricity
- Angular momentum

- Period

To determine the type of orbit of the asteroid, we can compute the energy per unit mass of the asteroid. That is,

$$\frac{E}{m} = \frac{1}{2}v^2 - \frac{GM}{r}.$$

Plugging in the numbers, we see that $E/m < 0$, so the orbit is elliptical (we know the orbit is not circular since the velocity vector is not always perpendicular to the position vector from the Sun).

Now let us calculate the semi-major axis of the orbit. The total mechanical energy of an elliptical orbit is given by the formula

$$E = -\frac{GMm}{2a},$$

where a is the semi-major axis. Therefore,

$$\frac{1}{2}mv^2 - \frac{GMm}{r} = -\frac{GMm}{2a}.$$

This yields

$$a = \frac{1}{\frac{2}{r} - \frac{v^2}{GM}}.$$

Therefore,

$$a = \frac{1}{\frac{2}{1.50 \times 10^{11}\,\mathrm{m}} - \frac{(9.85 \times 10^3\,\mathrm{m/s})^2}{(6.67 \times 10^{-11}\,\mathrm{m^3/kg \cdot s^2})(1.99 \times 10^{30}\,\mathrm{kg})}} = 7.91 \times 10^{10}\,\mathrm{m} = 0.53\,\mathrm{AU}$$

We know that $a(1+e) = r'$, where r' is the farthest distance the asteroid gets away from the earth and where e is the eccentricity of the orbit. Thus, let us calculate r'. Using angular momentum conservation and energy conversation, we get that $r' = 1.50 \times 10^{11}$ m (this is left as an exercise to the reader). Then we get that

$$e = \frac{r'}{a} - 1 = 0.899.$$

To calculate the angular momentum per unit mass of the asteroid, we simply do the following calculation:

$$\frac{L}{m} = (9.85 \times 10^3\,\mathrm{m/s})(1.50 \times 10^{11}\,\mathrm{m})\sin 15^\circ = 1.42 \times 10^{15}\,\mathrm{m^2/s}.$$

By Kepler's Third Law, we get

$$T = \left(\frac{4\pi^2}{GM}a^3\right)^{\frac{1}{2}} = 0.385\,\mathrm{yrs}.$$

25 Chemistry: Figure out the Compounds! – 5000 tickets

In a 10-liter evacuated chamber, 100 g of a metal oxide underwent a full decomposition reaction at 600°C and released O_2 gas. The resulting pressure inside the chamber was 1.57 atm.

For the fun of it, in another pathway, the experimenter reacts this metal oxide with NH_2OH to form a ternary compound **A** that is soluble in water. A then reacts in water with (1.5 equiv.) KX in a 1:1 ratio to form an insoluble compound **B**, where X is a halogen. 10.0 g of A with 90% yield was able to form 13.5 g of B.

X_2 is added to this solution that still contains some KX, and compound **C** is formed. Though the experimenter did not try this, it was also reported that when B reacts with an equimolar amount of X_2 in a solution of DMSO, a well-known polar aprotic solvent with the formula C_2H_6SO, complex **D** is found. The metal's oxidation numbers on A, B, and C are the same and are different from the oxidation number in D. All of the reactions are in the diagram under the questions.

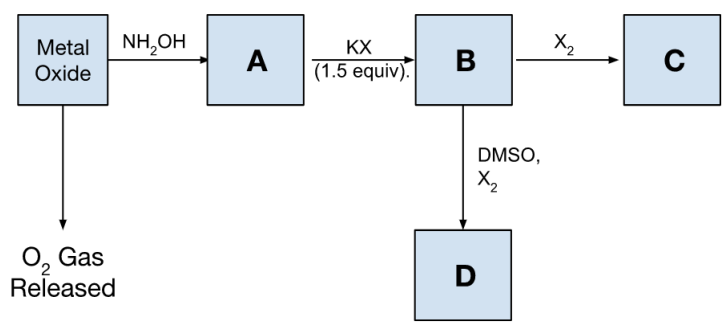

(a) Determine the full chemical formula of A.
(b) Determine the full chemical formula of B.
(c) Determine the anion of chemical C.
(d) Determine the full chemical formula of D.

To solve this, we first can look at the O_2 produced. Using PV = nRT, we find that 0.219 moles of O_2 was produced. This came from $100g$ of the metal oxide. We can then set up the following equation:

$$m \cdot \frac{100g}{0.219mol} - n \cdot 16\frac{g}{mol} = o \cdot \text{MM(metal)}$$

where m is the stoichiometric ratio between the metal oxide and O_2, n is the number of oxygen atoms in the metal oxide, and o is the number of the metal element in the oxide. If we assume $m = 1$, it would be reasonable for a metal oxide in the form of M_2O_3 to form $M_2O + O_2$, which means $n = 3$ and $o = 2$. Plugging the value in gives MM(metal). This perfectly aligns with Thallium which also forms a nice metal oxide Tl_2O_3.

Now, a simple search gives that reacting Tl_2O_3 with NH_2OH gives TlOH. So that means a) is **Thallium(I) Hydroxide**. This compound is soluble in water too.

For b), we must use some of the information given. Using stoichiometry principles, we can derive that, as they react in a 1:1 ratio, we have:

$$\frac{10.0g}{\text{MM(TlOH)}} \cdot (90\%) \cdot (\text{MM(TlX)}) = 13.5g$$

We get that MM(TlX) is $332.1g$. Subtracting the molar mass of thallium to get the remaining molar mass of X, we get that it is $127.7\frac{g}{mol}$. This is within the range to reasonably assume iodide as the anion in TlX. So TlI or **Thallium(I) Iodide** is the answer for b). It is in fact insoluble.

Adding I_2 can actually react with the anion I^- to form $I_3{}^-$. This is called the **Triiodide ion** which is the answer to c). Thallium remains in an oxidation state of +1.

Finally, in a DMSO solvent, it was shown in a 2002 paper that such a reaction would produce a complex with 2 DMSO molecules attached, alongside 3 iodide anions, to a thallium metal center with an oxidation state of +3. Therefore, the answer is $[TlI_3(C_2H_6O)_2]$ or **bis(dimethyl sulfoxide)triiodothallium(III)**

26 Computer Science: Lots of Coins – 7500 tickets

A country has a weird currency system: coins are worth either 11, 131, or 526.

For the interval $[10^{18}, 10^{18}+1, 10^{18}+2, \ldots, 10^{18}+10^5]$, one would like to know the bitwise xor sum of the minimum number of coins needed to represent each value within the interval. In other words, let $f(i)$ be the minimum amount of coins required to represent i money. Output $f(10^{18}) \otimes f(10^{18}+1) \otimes f(10^{18}+2) \otimes \cdots \otimes f(10^{18}+10^5)$, where $\otimes$ denotes the bitwise xor operation.

Note that it is guaranteed that any amount of money within the interval $[10^{18}, 10^{18}+1, 10^{18}+2, \ldots, 10^{18}+10^5]$ is possible to be represented by the three given types of coins.

Realize that for any multiple of $lcm(11, 131, 526) = 757966$, it is always optimal to just use the 526 coin, which uses $11 \cdot 131 = 1441$. Therefore, any ammount of coins can be represented as $x \cdot 757966 + y$, where y is a number less than 757966. Therefore, we can represent the amount of coins we need as $x \cdot 1441 + f(y)$. $f(y)$ for all $y < 757966$ can be found with dynamic programming. The general dp transition is $f(y) = \min(f(y-11), f(y-131), f(y-526)) + 1$ with some special cases when y is small. The answer is: **1901140684410640**.

27 Math: What a Mess! – 10000 tickets

The diagram below shows a 2D cross-section of the mess a child made when playing with geometry toys inside a large box. There are two circles, with the smaller one having radius $r = 5 \cdot \frac{2\sqrt{3050}-10}{2\sqrt{3050}+10}$. For the 50 cm × 100 cm rectangle that rests against the right wall, vertex A is 110 cm above the bottom of the box, and this rectangle touches the irregular triangle at one point Z. This triangle touches the left wall at point Y and the bottom of the box at point X such that YOX is a right triangle that inscribes those two circles. Both walls and side ZX, ZX < 25, are perpendicular to the bottom of the box. What is the area of $\triangle XYZ$? Round to the nearest whole number if necessary.

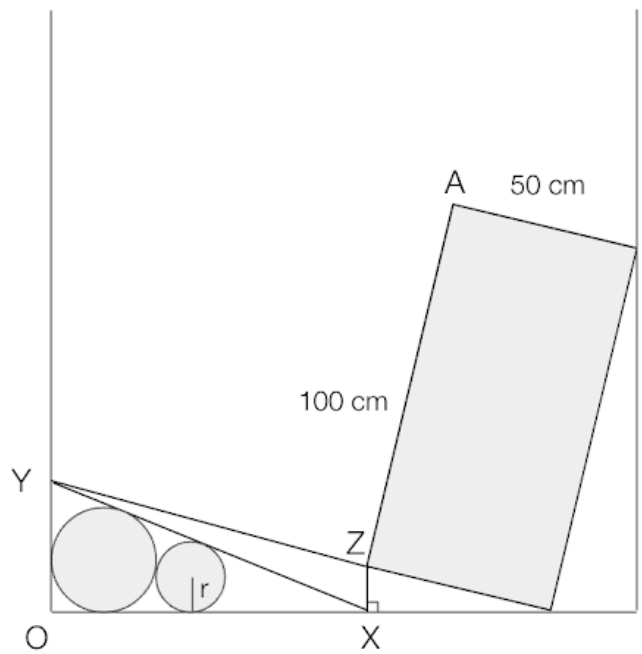

To solve this, we first want to get the length $\overline{ZX}$. Let point B be the point that the rectangle touches the right wall, point C be the point it touches the bottom of the box, and point D be the bottom right corner. We know from similar triangles: $\angle CBD = \angle CZX$. Further, since point A is $110cm$ above the bottom of the box, then $110 = \overline{BD} + \overline{ZX}$ given that it is a rectangle. So we can construct an equation from similar triangles to try to solve for $\overline{BD}$:

$$\frac{\overline{ZX}}{\overline{CD}} = \frac{110 - \overline{BD}}{\sqrt{100^2 - \overline{BD}^2}} = \frac{1}{2}$$

Solving gives $\overline{BD} = 80$ or 96. We take the latter since it must be less than 25, and thus $\overline{ZX} = 14$.

Now we move onto the triangle XYO. We only need to solve the length of $\overline{XO}$ to get the area of XYZ given that we have $\overline{XZ}$ already. To do this, we will work towards deriving

a formula for the smaller radius in terms of other components. Let R be the radius of the larger circle and its center be labelled as C_1 while that of the smaller circle be C_2. If we draw a line through the centers of the circles to X, this forms a straight line as the centers of these circles would be bisectors of the angle. Drawing lines down to the lower tangent point from both centers, we get a set of two similar triangles:

$$\frac{\overline{C_1X}}{R} = \frac{C_2X}{r}$$

We also have by adding line segments that:

$$R + r + \overline{C_2X} = \overline{C_1X}$$

We can combine them into one equation by substitution and isolating r:

$$r = \frac{\overline{C_1X} - R}{1 + \frac{C_1X}{R}} = R \cdot \frac{\overline{C_1X} - R}{\overline{C_1X} + R}$$

We know that $\overline{C_1X}$ is basically $\sqrt{R^2 + (\overline{OX} - R)^2}$. So finally we have:

$$r = \frac{\sqrt{R^2 + (\overline{OX} - R)^2} - R}{\sqrt{R^2 + (\overline{OX} - R)^2} + R}$$

Given that our value given for r is $r = 5 \cdot \frac{2\sqrt{3050}-10}{2\sqrt{3050}+10} = 5 \cdot \frac{\sqrt{3050}-5}{\sqrt{3050}+5}$, it fits nicely that one can reasonably infer $R = 5$. Now we just set,

$$\sqrt{(R^2(\overline{OX} - R)^2)} = 5$$

Solving gives that $\overline{OX} = 60cm$. We simply now do base times height to get that the area of $\triangle XYZ$ is $14 \cdot 60/2$ which is **420**.

28 A Washer in Space: Physics – 12500 tickets

Suppose that an astronaut in space has a flat washer of mass M with inner radius r and outer radius R.

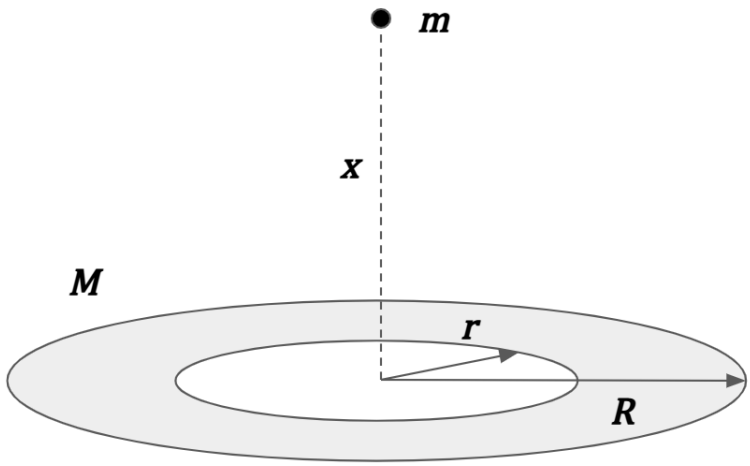

(a) If the astronaut holds a small ball of mass m a distance of x away from the washer on its symmetry axis, what is the gravitational force that the washer exerts on the ball?

(b) Now suppose that $x \ll r$. If the astronaut releases the ball from rest, what will be the period of the small oscillations of the ball? Assume that $m \ll M$ so that the washer does not move while the ball oscillates.

Throughout both parts (a) and (b), neglect gravity. Give your answers in terms of the given variables and any necessary fundamental constants.

We can split the washer up into an infinite number of thin rings and then add up the gravitational forces that each of them exert on the ball. Consider the ring centered the center of the washer with inner radius r' and outer radius $r' + \mathrm{d}r'$. The gravitational force that it exerts on the ball is

$$\mathrm{d}F = \frac{Gm\,\mathrm{d}M}{x^2 + r'^2} \cdot \frac{x}{\sqrt{x^2 + r'^2}},$$

since by symmetry only the vertical component matters and where $\mathrm{d}M = \dfrac{2\pi r'\,\mathrm{d}r'}{\pi(R^2 - r^2)} M$. Thus, the total gravitational force on the ball is

$$F = \frac{2GMmx}{R^2 - r^2} \int_r^R \frac{r'\,\mathrm{d}r'}{(x^2 + r'^2)^{3/2}}.$$

This yields

$$F = \frac{2GMmx}{R^2 - r^2} \left(\frac{1}{\sqrt{x^2 + r^2}} - \frac{1}{\sqrt{x^2 + R^2}} \right).$$

To find the period of small oscillations of the ball, we can write

$$m\ddot{x} = -\frac{2GMmx}{R^2 - r^2} \left(\frac{1}{\sqrt{x^2 + r^2}} - \frac{1}{\sqrt{x^2 + R^2}} \right),$$

where a negative sign has been added since the ball is attracted towards the ring. Now, since $x \ll r$,

$$\ddot{x} = -\frac{2GMx}{R^2 - r^2}\left(\frac{1}{r} - \frac{1}{R}\right) = -\frac{2GMm}{Rr(R+r)}x.$$

In the differential equation $\ddot{x} = \omega^2 x$, the period of x is given by $2\pi/\omega$. Thus, the period of small oscillations of the ball is

$$T = \pi\sqrt{\frac{2Rr(R+r)}{GM}}.$$

29 Chemistry: No More Valance Bond Theory – 15000 tickets

Crystal Field Theory (CFT) is a theory that describes the breaking of the degeneracies in typically the d-orbitals of transition metal coordination complexes, and it has been relatively successful in predicting spectrochemical and magnetic properties.

In octahedral complexes (i.e. $[Cu(H_2O)_6]^{2+}$), the d-orbitals are often depicted to split into 2 energy different levels. However, a distortion known as Jahn Teller distortions can lower a complex's symmetry and the energy of occupied orbitals. This results in either the increasing or decreasing in energy of orbitals with z-components and therefore shorter or longer bond lengths along the z-axis.

For a certain complex, it undergoes Jahn Teller compression, and it's CFT splitting is described in the diagram below:

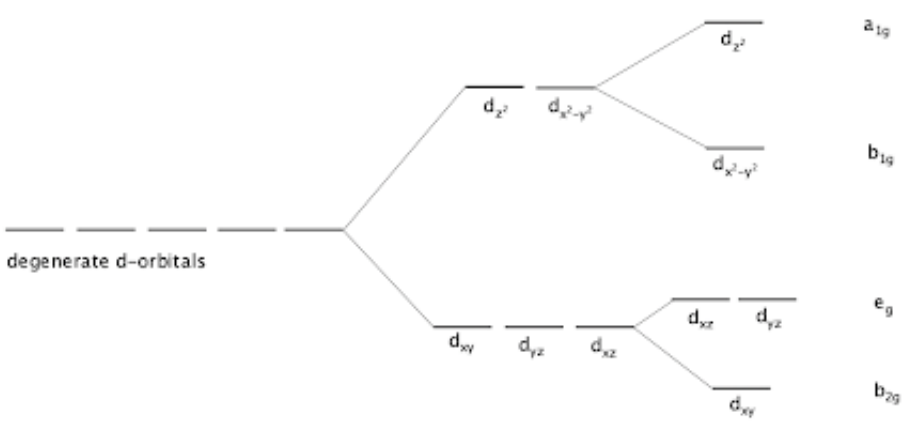

For the distorted complex, the e_g set lies 0.956 eV below the ground state energy level of the d-orbitals, the energy required for the transition from the e_g set to the b_{1g} set is 1.620 eV, and the crystal field splitting energy of this complex is 3.482 eV.

(a) What is the energy of the a_{1g} set relative to the ground state energy level of the d-orbitals in eV?

(b) What is the energy demand for the transition from the b_{1g} set to the a_{1g} set?

(c) What is the expected colour of the complex if the transition in (b) is responsible for colour?

For this problem, the key is conservation of energy. The sum of the relative energies (to the degenerate orbitals) of the split orbitals after Jahn-Teller Distortion must be 0.

If we let A be the energy difference between the ground state energy of the a_{1g} set and B be the energy difference between the ground state energy of the b_{2g} set, then we can get the following expressions:

$$A + (1.620eV - 0.956eV) + 2 \cdot (-0.956eV) + B = 0$$
$$A - B = 3.482eV$$

The first one arises from conservation of energy and the second from the given Crystal Field Splitting Energy. Solving gives A =**2.365 eV** which was what a) was looking for.

Here is a simple calculation which is based on the answer to the previous question:

$$2.365eV - (1.620eV - 0.956eV) = 1.701eV$$

So, for b), the transition for b_{1g} to a_{1g} takes **1.701 eV**.

Finally, for c), we need to use $E = \frac{hc}{\lambda}$. Converting the 1.701 eV to joules, and plugging in the appropriate constant values, we get that, approximately, $\lambda = 730nm$. Now, this is the wavelength of light that the complex absorbs. However, the question is asking the colour of the appearance of the complex. For this, we look at the colour wheel. 720 nm corresponds to red, and so we have to look at its complementary colour which is **green**, giving us the answer.

30 Pathology: Medical Mystery – 20000 tickets

A 11-month-old girl was presented to you, a well-known doctor in the area. Her parents report that she often shows fussiness around food, boredom when playing with toys, clumsiness, and periods of grizzling and crying, even after only 2-3 hours awake. Physical examination indicated she has jaundice, an enlarged spleen, and skeletal deformations, most notably on the child's face. A complete blood count test revealed microcytic hypochromic anemia, and hemoglobin electrophoresis showed that most of the patient's hemoglobin is fetal hemoglobin. Increasing intake of iron does not improve her condition. What is the most likely diagnosis?

One important information given in the report is that the child is experiencing microcytic hypochromic anemia. This could lead several possibilities, the most prominent two being thalassemia and iron-deficiency anemia as possible diagnoses. However, the introduction of iron for the child does not aid with her condition, that eliminitating the latter. This leaves us with thalassemia, but there are also sub-categories to analyze.

In this case, we would have to decide whether it is alpha or beta thalassemia. It is more likely β-thalassemia because most of the patient's hemoglobal is fetal hemoglobin. This is common in β-thalassemia because to compensate for excess α globin chains, which can damage red blood cells' membranes, caused by a lack of β globin chains, the body ramps up the production of fetal hemoglobin. This is especially the case when there is no functional beta production, which is in the case of the **β-Thalassemia Major**. Note that β-Thalassemia Minor, whereby there still one functional gene encoding the beta globin which generally result in limited symptoms or even being asymptomatic, would not be considered correct since specificity is important for this question.

31 BONUS: Organic Chemistry Puzzle – 25000 tickets

Draw the structures lettered A through J (each structure is worth 2500 tickets):

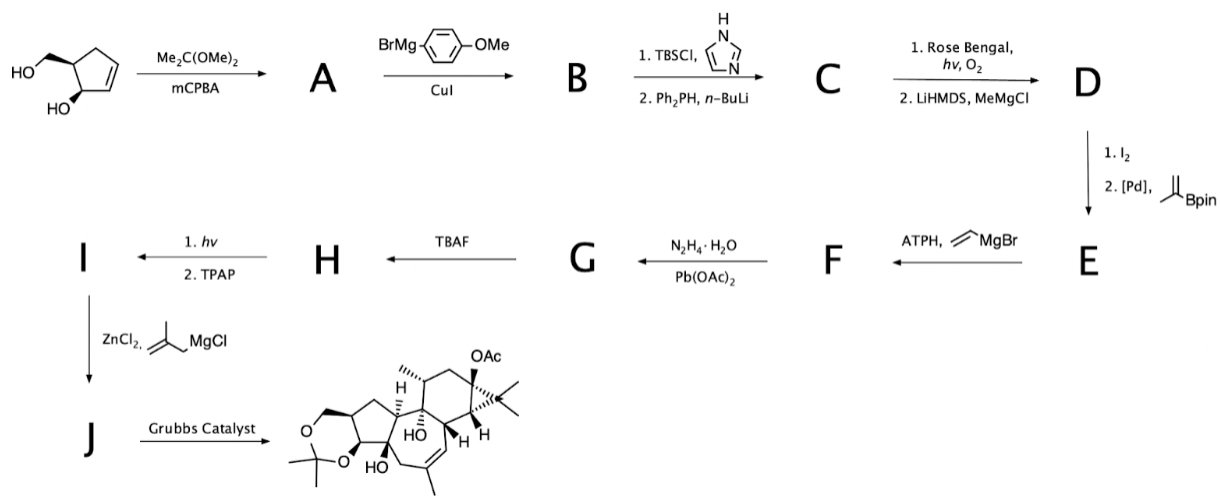

Below is the synthesis scheme:

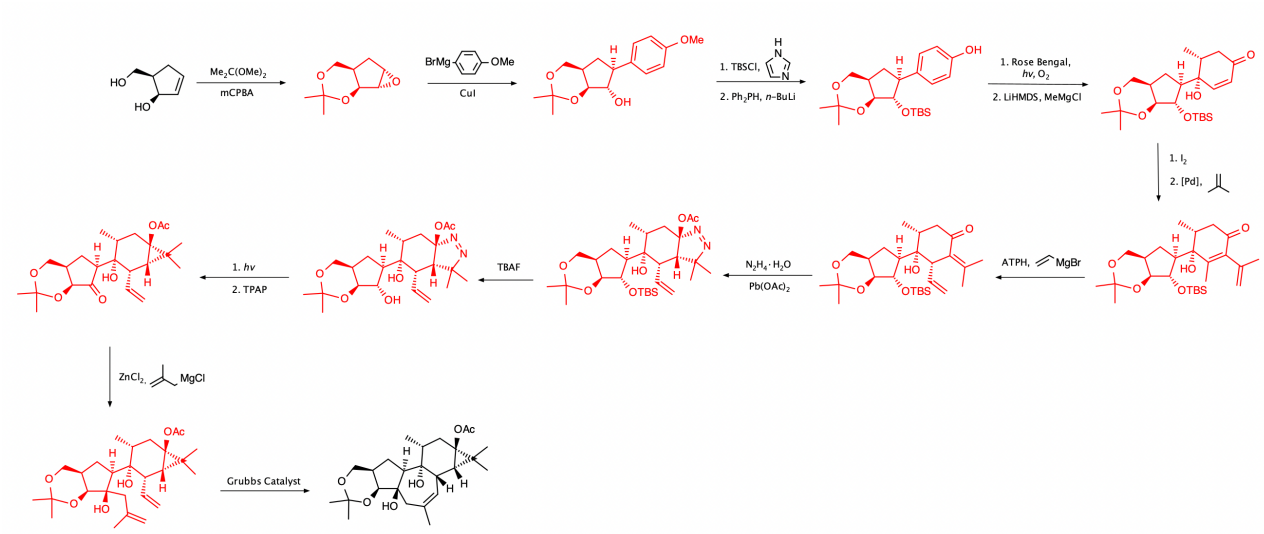
Me2C(OMe)2
mCPBA
BrMg
OMe
CuI
1. TBSCl,
2. Ph2PH, n-BuLi
1. Rose Bengal, hv, O2
2. LiHMDS, MeMgCl
1. I2
2. [Pd],
ATPH,
MgBr
N2H4·H2O
Pb(OAc)2
TBAF
1. hv
2. TPAP
ZnCl2,
MgCl
Grubbs Catalyst